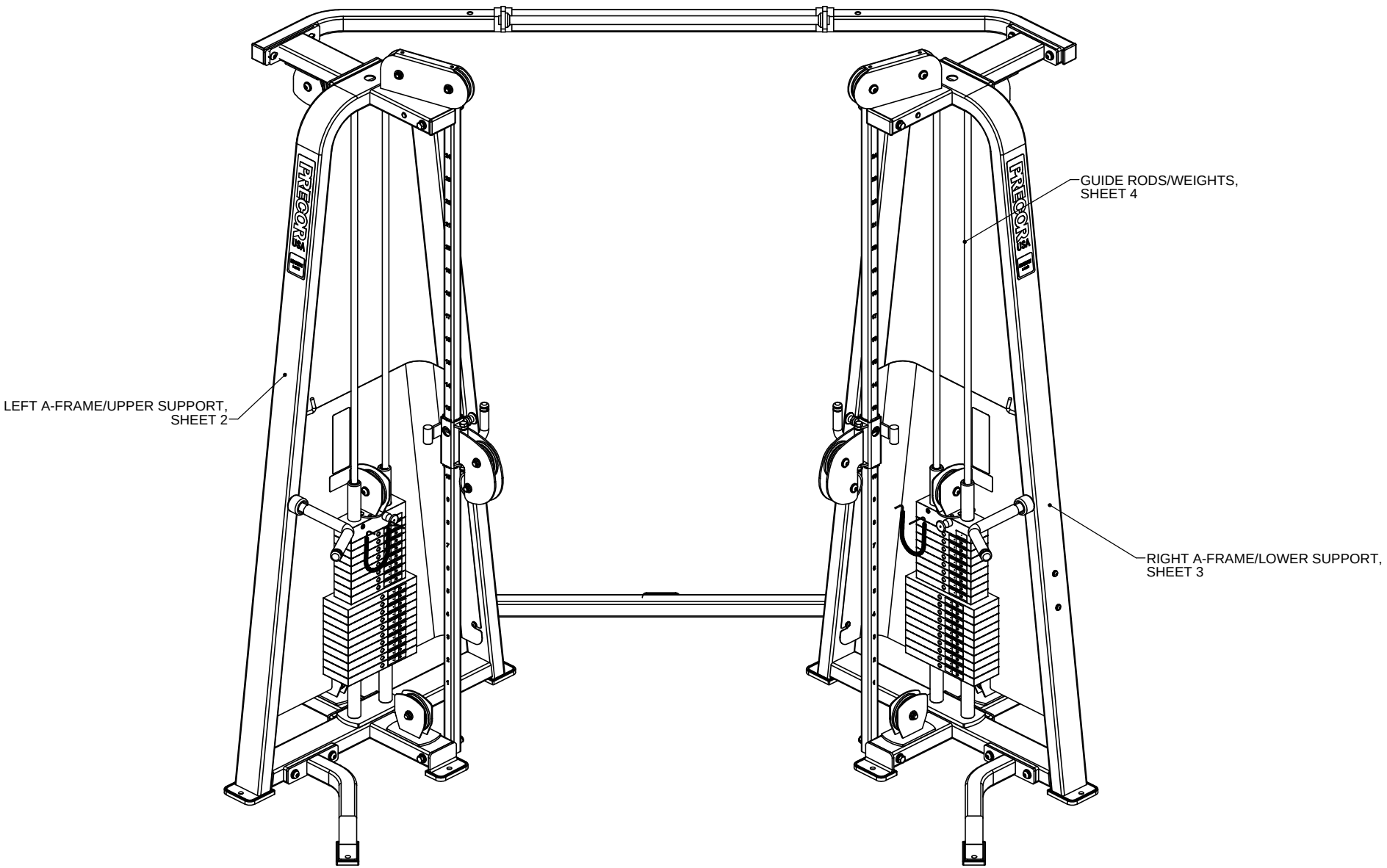

CWFTSKS	P/N : CW33043-101	SUBREV : L
DRAWN BY : KAW	DATE : 5.22.13	SHEET 1 OF 4

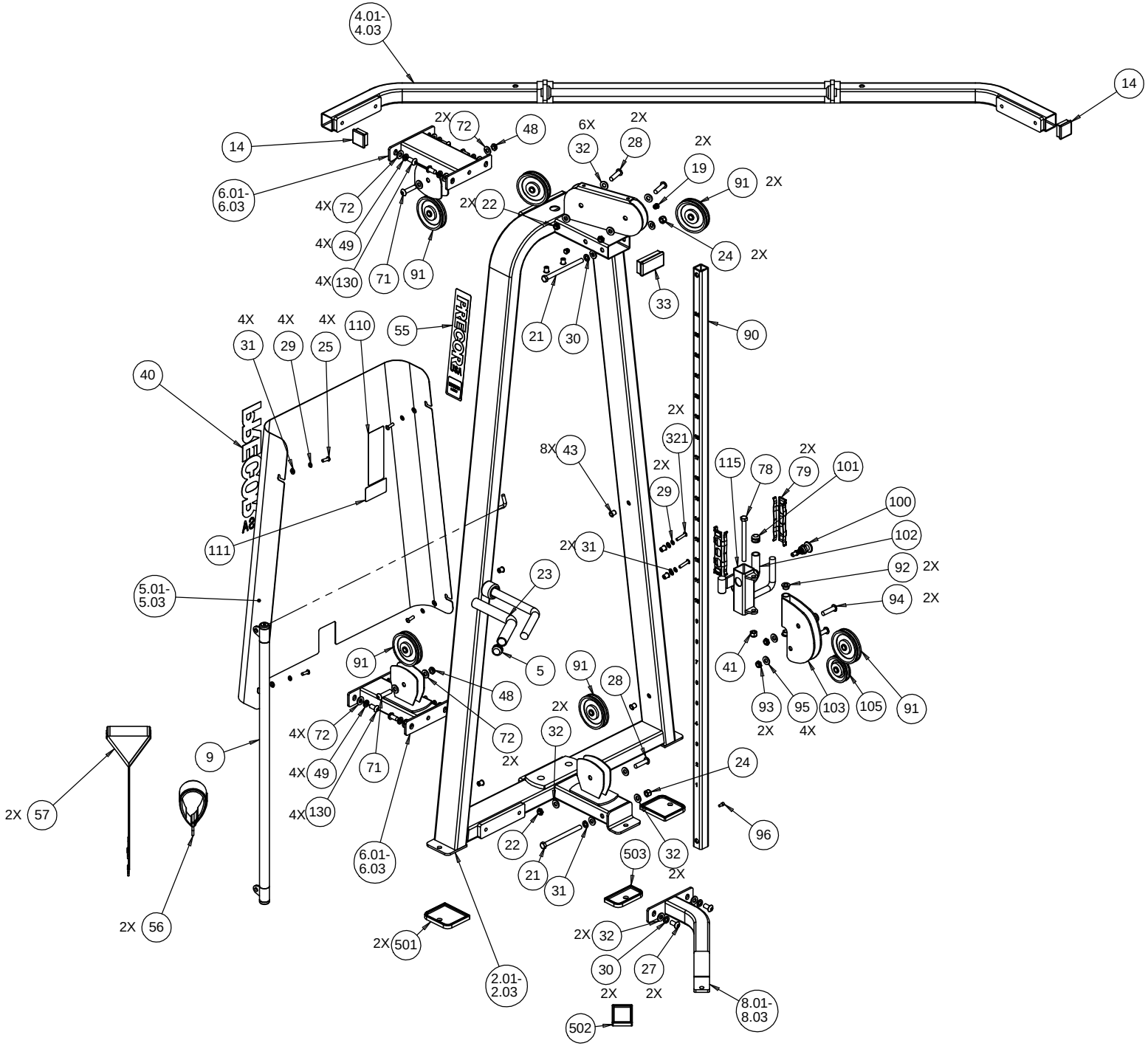

PAGE	OF	DWG. NO.	SUBREV
2	4	CW33043-101	L

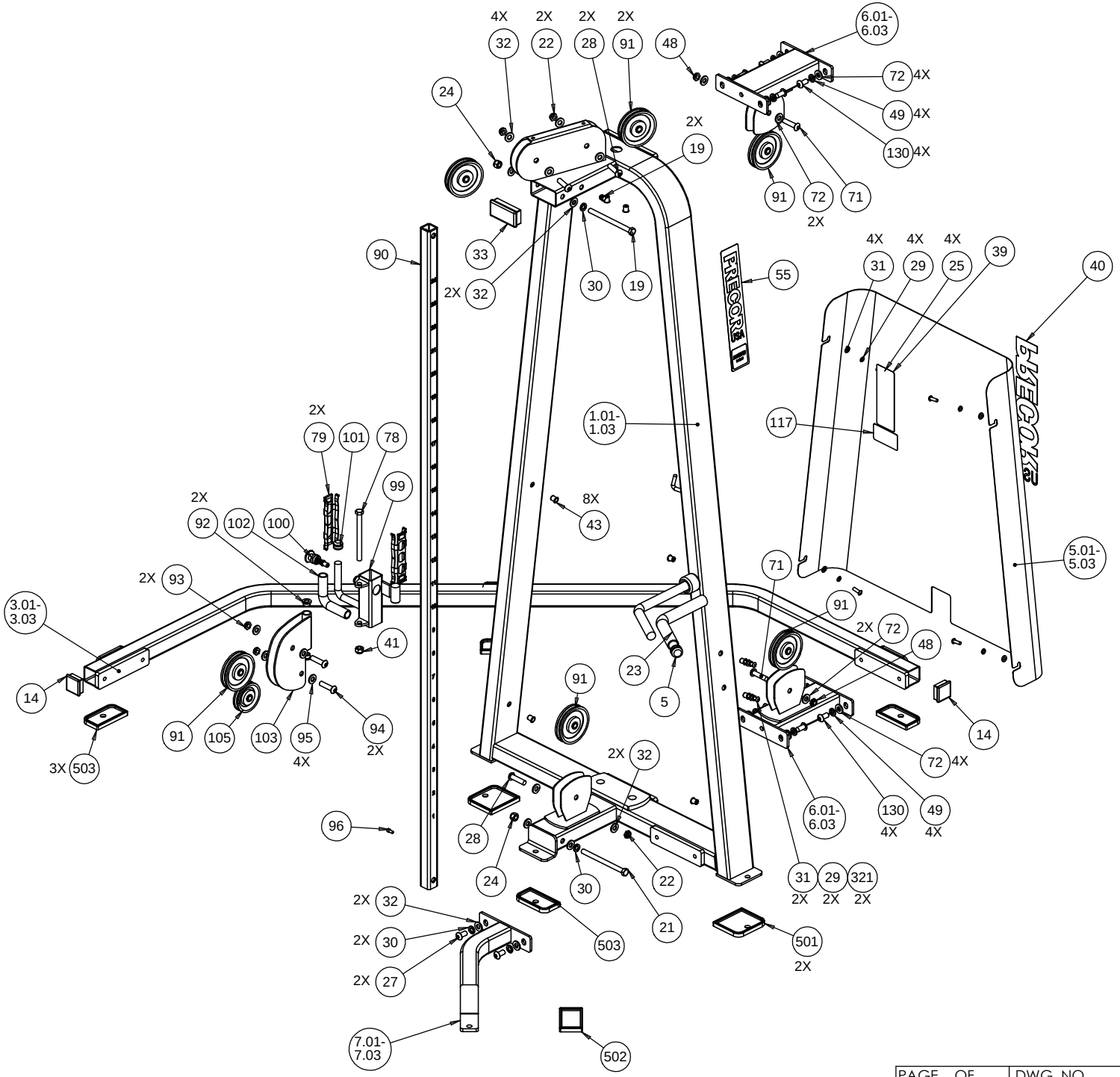

PAGE	OF	DWG. NO.	SUBREV
3	4	CW33043-101	L

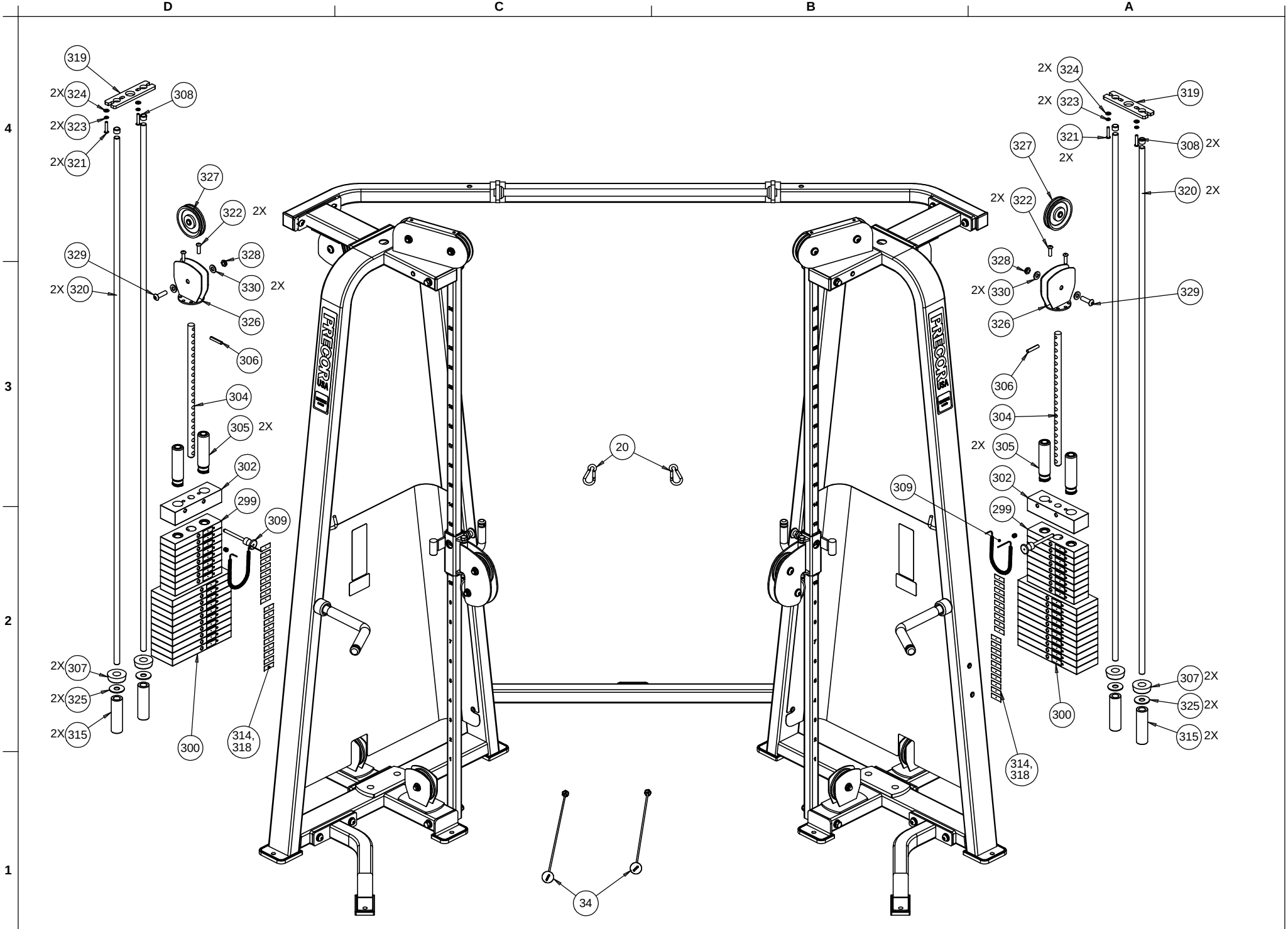

PAGE	OF	DWG. NO.	SUBREV
4	4	CW33043-101	L

Bubble#	OEM Number	Description
14	PPP00000CW11311103	ENDCAP, REC TUBE, 2X2, BLK PLASTIC
19	PPP00000CW11382105	CAP, TUBE, PLASTIC, ROUND, CCF-5/8-
20	PPP00000CW12589741	CARABINER, HOOK, MEDIUM, 5/16 DIA 3
21	PPP000CWHCYN050650	BOLT,HH#5,1/2-13X6.50,BLACK XYLAN
22	PPP000CWKAYN050031	LOCKNUT, NYLON INSERT, HALF, UNC, 1
23	PPP0000CWGR4612000	GRIP, RUBBER, 1.00 in. OD HANDLE, 12.0
24	PPP000CWKDYN050059	NUT,NYLOCK,FULL,1/2-13,BX
25	PPP000CWTAYN031100	SCREW, BUTTON HEAD, BLK XYLAN, 5/16
27	PPP000CWTAYN050100	SCREW, BUTTON HEAD, BLK XYLAN, 1/2
28	PPP000CWTAYN050200	SCREW, BUTTON HEAD, BLK XYLAN, 1/2
29	PPP00CWWALYN031008	WASHER, SPLIT, 5/16 ID, BL
30	PPP00CWWALYN050013	WASHER, SPLIT, 1/2 ID, BLK XYLAN
31	PPP000CWWBKN031007	WASHER, FLAT, TYPE A, SAE, 5/16 ID
33	PPP00000CW11311102	ENDCAP, REC TUBE, 2X4, BLK PLASTIC
34	PPP000CWCLRV320060	ASSY, CABLE, HAND GUARD, FTS,407B
41	PPP000CWKDYN050059	NUT,NYLOCK,FULL,1/2-13,BX
43	PPP00000CW12537109	NUT,INSERT,THIN-NUT,LARGE FLANGE
48	PPP000CWKAYN050031	LOCKNUT, NYLON INSERT, HALF, UNC, 1
49	PPP00CWWALYN050013	WASHER, SPLIT, 1/2 ID, BLK XYLAN
55	PPP00000CW39163101	BADGE, ICARIAN LINE, LARGE
56	PPP0000CWAC4009101	ACCESSORY, STRAP, ANKLE, VELCO
57	PPP00000CW40001101	ASSY,HANDLE,D-RING,OVERMOLDED
71	PPP000CWTAYN050200	SCREW, BUTTON HEAD, BLK XYLAN, 1/2
78	PPP000CWHCCN050600	SCREW, HEX HEAD, ZINC, 1/2-13 X 6
79	PPP000CWS124006101	GUIDE,THIN,TELESCOPING TUBE,HSL0602
90	PPP0000CWPF4020714	TUBE,STEEL,HRPO, 1 1/2 X 1 1/2 X 3/
91	PPP0000CWAC1009101	PULLEY, 4 1/2 DIA X 1/2 ID
92	PPP00000CW10433108	BUSHING,FLNGD,.75ODX.5IDX.5,IGUS R
93	PPP000CWKAYN050031	LOCKNUT, NYLON INSERT, HALF, UNC, 1
94	PPP000CWTAYN050200	SCREW, BUTTON HEAD, BLK XYLAN, 1/2
96	PPP000CWCAYN025050	SCREW, SOCKET HEAD, BLK XYLAN, 1/4
100	PPP00000CW30165752	ASSY, POP PIN, 0.450 DIA NOSE, BLU
101	PPP00000CWAC220901	HANDLE END CAP W/SET SCREWS, DIA 3/

102	PPP0000CWGR4806000	GRIP, RUBBER, .75 in. OD HANDLE, 6.00 in.
103	PPP00000CW30497721	WELDMENT, W/2 PULLEY WHEELS, WRKL B
105	PPP0000CWAC1008101	PULLEY, 3 1/2 DIA. X 1/2 ID
130	PPP000CWTAYN050100	SCREW, BUTTON HEAD, BLK XYLAN, 1/2
203	PPP000CWR010115101	BUSHING BOTTOM WEIGHT
299	PPP00000CW36275101	ASSY,WT PLATE,5LB,IC
300	PPP00000CW36276102	ASSY,WT PLATE,10LB,IC
302	PPP00000CW36274102	ASSY,TOP PLATE,MED 10#,NO STEM,IC
302	PPP00000CW36271101	ASSY,TOP PLATE,SML 10#,18 PLATE,IC
304	PPP00000CW36290101	STEM,SLCTR,WT STK,20 HOLE,NO STEM,I
305	PPP00000CW58004101	WEIGHT STACK BUSHING KIT, KS SERIES
306	PPP000CWLDNN038200	SLOTTED PIN SPRING, DIA 3/8 X 2
307	PPP00000CW12402101	BUMPER, ID 1.050, BLK RUBBER
308	PPP00000CW12404101	CAP, GUIDE ROD,DIA 3/4, BLK
310	PPP00000CW33870102	ASSEMBLY, 5 in. WEIGHT STACK PIN & LEA
319	PPP0000CWPF1016101	UHMWPE, GUIDE ROD CAPTURE PLATE
321	PPP000CWTAYN031175	SCREW, BUTTON HEAD, BLK XYLAN, 5/16
322	PPP000CWCAYN038100	SCREW, SOCKET HEAD, BLK XYLAN, 3/8
323	PPP00CWWALYN031008	WASHER, SPLIT, 5/16 ID, BL
324	PPP00CWWABKN031007	WASHER, FENDER,BLK ZN, 5/16 ID X 1
325	PPP000CWWCKN075015	WASHER, FLAT, TYPE A, WIDE, 3/4 ID
326	PPP00000CW32651721	WELDMENT, 4.50 in. TOP PLATE PULLEY HO
327	PPP00000CW36255101	DECAL SET,150LB STK,10-50-150,IC
328	PPP00000CW36256101	DECAL SET,200LB STK,10-200,IC
329	PPP0000CWAC1009101	PULLEY, 4 1/2 DIA X 1/2 ID
330	PPP0000CWPF1218712	GUIDE ROD,DIA 3/4, #8,CHM
331	PPP000CWKAYN050031	LOCKNUT, NYLON INSERT, HALF, UNC, 1
332	PPP000CWTAYN050200	SCREW, BUTTON HEAD, BLK XYLAN, 1/2